OCTAGON SIGN BASE SYSTEM

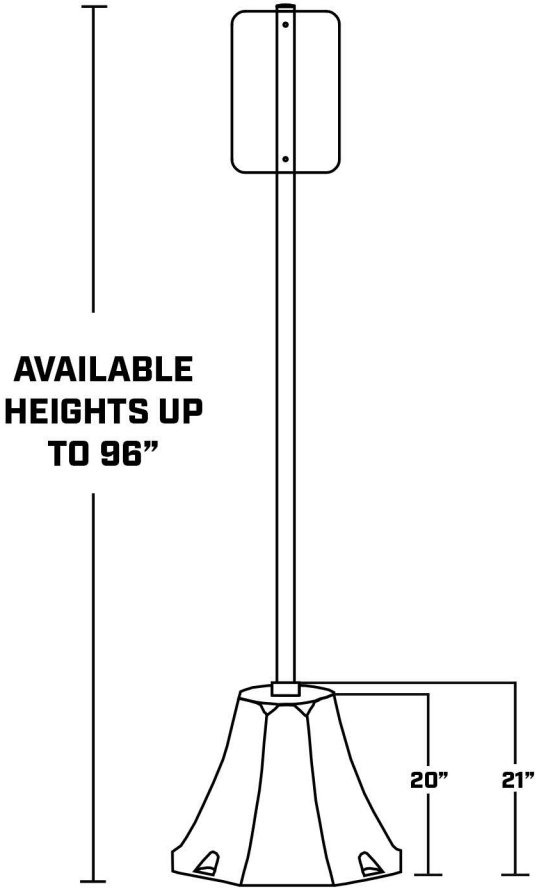

TOP VIEW

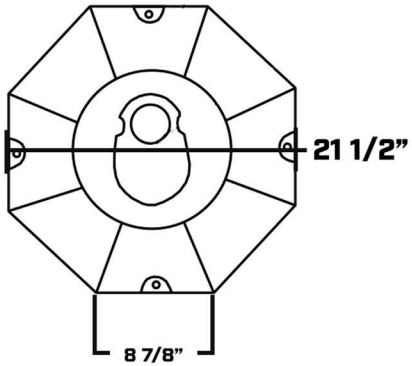

ADD ON

AVAILABLE UPON REQUEST

SIGN BRACKETS

Specifications:

Sign Base Material:
1/4” Nominal Wall Thickness
Low-Density Polyethylene Thermoplastic
With Ultra-Violet and Anti-Static Additives

Sign Base Dimensions:
22” H x 8” W each side

Weight:
45 lbs. with pole

Colors:
Standard Colors: OSHA Yellow, Blue or Red
Custom colors available

Height:
Standard Height is 96” without wheels

Installation:
Fill with concrete, sand or pea gravel

WWW.IDEALSHIELD.COM • (866) 825-8659• PLEASE SUBMIT YOUR PRODUCT INQUIRY TO INFO@IDEALSHIELD.COM

NO.	REVISIONS	DATE	APPROVED

idealSHIELD
2525 Clark St.
Detroit, MI 48209

PROJECT	CUSTOMER	DESCRIPTION
		OCTAGON SIGN BASE

DRAWN BY: GCC
APPROVED BY:
DATE:
PROJECT NO.: —
SCALE:
FINISH:
DRAWING NO.:
MATERIAL:
SHEET 1 OF 1